AC 120

Top View

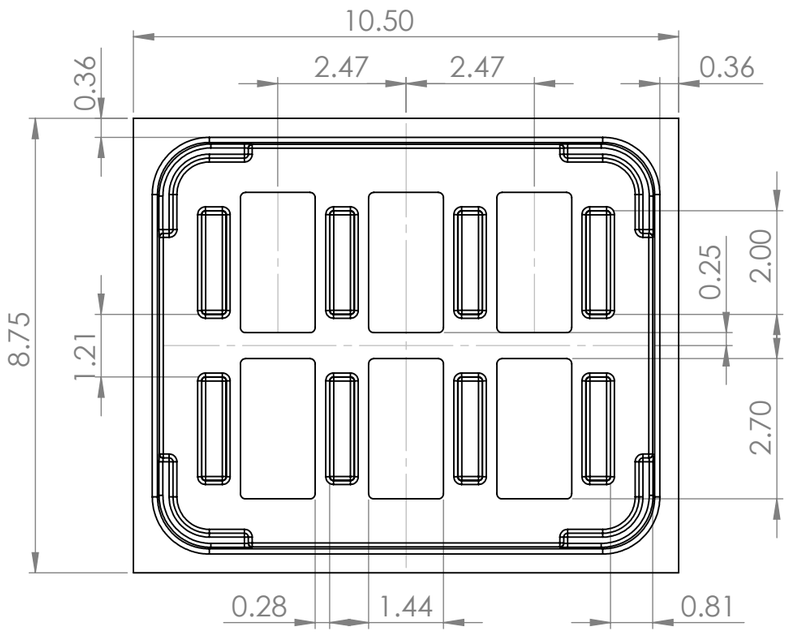

Punched slots

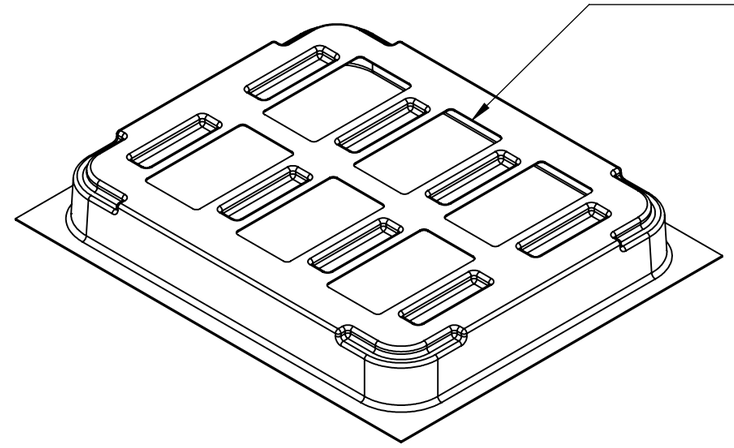

Front View

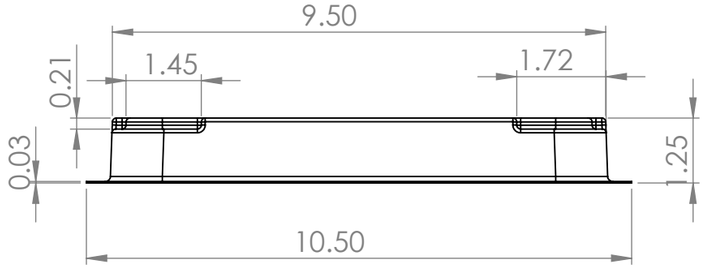

Right Side View

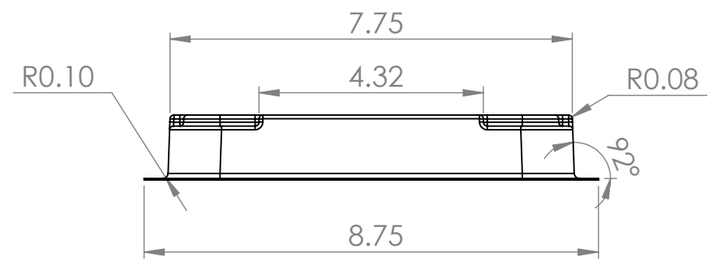
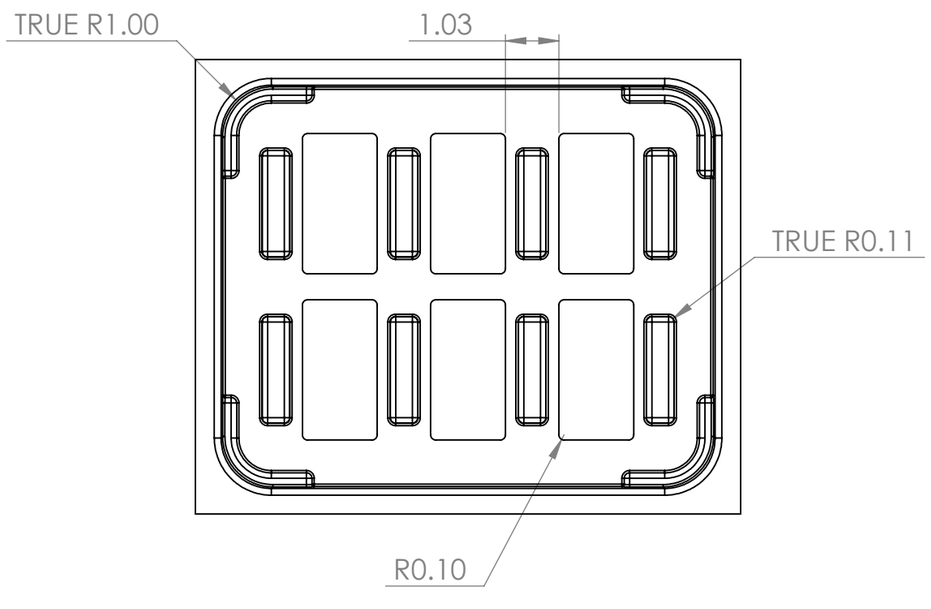
Bottom View